GCSE

WJEC GCSE
Design and Technology

Approved by Qualifications Wales

Sample Assessment Materials

Unit 1: Design and Technology in the 21st Century (Engineering Design)

Teaching from 2026
For award from 2028

Version 2 - January 2026



This Qualifications Wales regulated qualification is not available to centres in England.

Made for Wales.
Ready for the world.

WJEC would like to thank the students and teachers of Fitzalan High School, Cardiff and Llanwern High School, Newport for their participation in the creation of these covers.

Contents

Accessing Sample Assessment Materials	2
Mark scheme	3
Mapping grid	19

© WJEC CBAC Ltd 2025.

SUMMARY OF AMENDMENTS

Version	Description	Page number
2	Updated hyperlink to the online assessment materials added following an amendment to the diagram from 20N to 200N in Section 1 Question 5.	2

© WJEC CBAC Ltd 2025.

Unit 1: Design and Technology in the 21st Century (Engineering Design)

Unit 1: Design and Technology in the 21st Century (Engineering Design), is assessed by Digital Examination. The online Sample Assessment Materials can be accessed here: https://web.download.wjec.co.uk/surpass/packaged-exams/GCSE-DT-ED-S4/index.html

Guidance for accessing the online Sample Assessment Materials is detailed in the following steps:

<table>
<tr><td colspan="2">1. Click on the link provided:</td></tr>
<tr><td>2. Click ‘OK’:</td><td>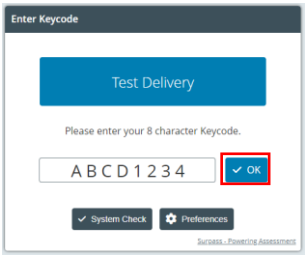
</td></tr>
<tr><td>3. Click ‘Yes’:</td><td>
</td></tr>
<tr><td>4. Click ‘Start the Test’:</td><td>
</td></tr>
<tr><td>5. To navigate through the assessment, click ‘Back’ or ‘Next’ at the bottom of the screen:</td><td>
</td></tr>
<tr><td colspan="2">6. Once the Sample Assessment Material has been viewed, close the tab or browser.</td></tr>
</table>

© WJEC CBAC Ltd 2025.

MARK SCHEME

Guidance for examiners

Generic marking principles

- Marks awarded are always whole marks (not half marks, or other fractions).
- Answers should only be judged on the quality of spelling, punctuation and grammar when these features are specifically assessed by the question as indicated by the mark scheme. The meaning, however, should be unambiguous.
- Marks should be awarded using the full range of marks defined in the mark scheme for the question (however; the use of the full mark range may be limited according to the quality of the candidate responses seen).
- Marks awarded are based solely on the requirements as defined in the mark scheme. Marks should not be awarded with grade thresholds or grade descriptors in mind.

Positive marking

It should be remembered that candidates are writing under examination conditions and credit should be given for what the candidate writes, rather than adopting the approach of penalising candidates for any omissions. It should be possible for a very good response to achieve full marks and a very poor one to achieve zero marks. Marks should not be deducted for a less than perfect answer if it satisfies the criteria of the mark scheme.

For questions that are objective or points-based, the mark scheme should be applied precisely. Marks should be awarded as indicated and no further subdivision made.

Mark schemes often list points which may be included in candidates' answers. The list is not exhaustive. The inclusion of *'Credit any other valid response.*' (or similar instruction) within mark schemes allows for the possible variation in candidates' responses. Credit should be given according to the accuracy and relevance of candidates' answers.

Appropriate terminology is reflected in exemplar responses in mark schemes. However, unless there is a specific requirement within a question, candidates may be awarded marks where the answer is accurate but expressed in their own words.

Banded mark schemes

For band marked questions mark schemes are in two parts; the indicative content and the assessment grid.

The indicative content suggests the range of points and issues which may be included in candidates' answers. It can be used to assess the quality of the candidate's response. As noted above, indicative content is not intended to be exhaustive and candidates do not have to include all the indicative content to reach the highest level of the mark scheme.

However, to reach the highest level of the mark scheme a candidate must meet the requirements of the highest mark band. Where a response is not creditworthy, that is, it contains nothing of any significance to the mark scheme, or where no response has been provided, no marks should be awarded.

© WJEC CBAC Ltd 2025.

The marking of banded mark questions should always be positive. This means that, for each candidate's response, marks are accumulated for the demonstration of relevant skills, knowledge and understanding: they are not deducted from a maximum on the basis of errors or omissions.

Examiners should first read and annotate the candidate's answer to pick out the evidence that is being assessed in that question. The mark scheme can then be applied. This is done as a two-stage process.

Stage 1 – Deciding on the band

Beginning at the lowest band, examiners should look at the candidate's answer and check whether it matches the descriptors for that band. If the descriptors at the lowest band are satisfied, examiners should move up to the next band and repeat this process for each band until the descriptors most closely matches the work.

Stage 2 – Deciding on the mark

Having determined the appropriate band, deciding on the mark within a band will be made on the basis of a 'best fit' procedure, weaknesses in some areas being compensated for by strengths in others.

Examiners should use the full range of marks available to them. Marking should be positive, rewarding achievement rather that penalising failure or omissions. The awarding of marks must be directly related to the marking criteria, and all responses must be marked according to the banded levels provided for each question.

Standardising material that has already been awarded a mark will be provided during standardising and this should be used as a reference material when assessing work. Examiners are reminded of the need to revisit the standardising material as they apply the mark scheme in order to confirm that the band and the mark allocated is appropriate to the work submitted.

This mark scheme instructs examiners to look for and reward valid alternatives where indicative content is suggested for an answer. This is not a checklist for expected content in an answer, or set out as a 'model answer', as responses must be marked in the banded levels of response provided for each question. Where a candidate provides a response that contains aspects or approaches not included in the indicative content, examiners should use their professional judgement to determine the validity of the response in light of the task and reward as directed by the bands. Candidates are free to choose any approach that is relevant to the set task. Candidates can (and will most likely) incorporate ideas other than those mentioned in the mark scheme.

© WJEC CBAC Ltd 2025.

Engineering Design

Question		Answer	AO1	AO2	Total Mark
1.	(a)	Use the drop-down lists to identify the **two** missing stages of a Life Cycle Analysis.			
		Award **one** mark each for each for the following: • sourcing materials ('The Trees') • manufacturing (The Factory').	2 x 1		2
	(b) (i)	The image below shows a commonly used rechargeable lithium-ion battery found in a smartphone. Give **two** reasons how the disposal of a battery in landfill could have a negative impact on the environment.			
		Award **one** mark each for **two different** reasons noted within the response, based on: • batteries corrode and leech chemicals (1) • chemicals such as lead, lithium, cadmium, and mercury can be introduced into the ground (1) • hazardous or harmful chemicals could poison and pose dangerous health issues to humans and animals (1) • hazardous or harmful chemicals could enter water sources (1) • risk of fire/explosion from Lithium Ion and Lipo batteries if knocked around too much (1).	2 x 1		2

© WJEC CBAC Ltd 2025.

	(ii)	The smartphone battery can be recharged. Name **one** environmentally friendly power source that could be used to charge the battery.			
		Award **one** mark for any of the following responses: • solar • wind • dynamo. Credit other valid responses.	1		1
	(iii)	Explain why it is important to disassemble and recycle the smartphone at the end of its life cycle.			
		Award up to **three** marks for an explanation of why it is important to disassemble and recycle the smartphone the end of its life cycle, based on: • Smartphones contain valuable materials such as gold, silver, and rare earth metal. (1) • These can be recovered and reused in new products. (1) • It is better for the environment. (1) • It reduces the risk of hazardous substances (e.g., lithium, lead, mercury) leaking into soil and water from landfill sites. (1) • It helps minimise electronic waste (e-waste). (1) • Recycling components uses less energy than mining and processing raw materials for new devices. (1) • It lowers CO_2 emissions. (1) • Many countries have laws requiring proper disposal and recycling of electronic waste. (1) • It supports the recycling industry, creating jobs in material recovery and sustainable manufacturing. (1) • Ensures materials are continuously reused rather than discarded, promoting sustainability. Circular economy. (1)		3	3

© WJEC CBAC Ltd 2025.

<table>
<tr><th colspan="2">Question</th><th>Answer</th><th>AO1</th><th>AO2</th><th>Total Mark</th></tr>
<tr><td rowspan="2">2.</td><td rowspan="2">(a)</td><td colspan="4">Select the correct term to match each description.</td></tr>
<tr><td>Award one mark each up to a maximum of three for the following responses:
<table><tr><th>Stages</th><th>Descriptions</th></tr><tr><td>Planning for making</td><td>A process of organising tasks, resources, and timelines to ensure efficient project execution.</td></tr><tr><td>Specification</td><td>A document outlining objectives, requirements, and constraints to guide a project's development and decisions.</td></tr><tr><td>Modelling concepts</td><td>Creating representations to visualise and test concepts, structure, or systems before actual development.</td></tr></table></td><td></td><td>3 x 1</td><td>3</td></tr>
<tr><td rowspan="2"></td><td rowspan="2">(b) (i)</td><td colspan="4">State two methods of modelling the waterproof speaker during the designing stages of the design process.</td></tr>
<tr><td>Award one mark for each of the following responses:
• CAD (Computer Aided Design) modelling
• Physical prototypes.</td><td>2 x 1</td><td></td><td>2</td></tr>
<tr><td rowspan="2"></td><td rowspan="2">(ii)</td><td colspan="4">State two issues that the manufacturer would face if the waterproof speaker was not within tolerance when made.</td></tr>
<tr><td>Award one mark each for two different issues noted within the response, based on:
• The speaker may not be fully waterproof. (1)
• The speaker may be damaged or broken more easily. (1)
• An increase in the number of products being returned and additional warranty claims. (1)
• A poor-quality product could harm the manufacturer’s brand image. (1)
• Additional resources may be needed for rework, repairs, or recalls. (1)
• The manufacturer could face legal action if the product does not meet advertised specifications or safety standards. (1)

Credit any other valid responses.</td><td>2 x 1</td><td></td><td>2</td></tr>
</table>

© WJEC CBAC Ltd 2025.

	(iii)	The waterproof speaker is available in a range of colours. Discuss how this has an impact on sales.			
		Answers that indicate an understanding of sales should be awarded up to **three** marks, based on: • A variety of colours attracts a wider range of customers with different preferences. (1) • More options encourage customers to purchase, potentially boosting overall sales. (1) • Offering multiple colours can set the product apart from competitors. (1) • The ability to offer popular or seasonal colours can keep the product relevant. (1) Credit any other valid responses.		3	3
	(c) (i)	State **one** method used to connect the waterproof speaker to other devices wirelessly.			
		Award **one** mark for any of the following responses: • Bluetooth connectivity • Wi-fi • 4G.	1		1
	(ii)	Give **two** reasons for the use of Surface Mount Technology (SMT) on the waterproof speaker circuit board.			
		Award **one** mark each for **two different** reasons noted within the response, based on: • Smaller components. (1) • Higher component density (components per unit area). (1) • Components can be placed on both sides of the circuit board. (1) • Small errors in component placement are corrected automatically. (1) • Better mechanical performance under shock and vibration conditions. (1) • Fewer holes are needed to be drilled (1). This is less time-consuming and expensive. (1) • Lower initial cost and time of setting up for mass production, using automated equipment. (1) Many SMT parts cost less than equivalent through-hole parts. (1) Credit any other valid responses.		1 x 1	2

© WJEC CBAC Ltd 2025.

	(iii)	Explain why injection moulding has been used for the waterproof speakers.			
		Answers that explain why injection moulding has been used should be awarded up to **three** marks, based on: • Ensures each speaker casing is produced to exact specifications, maintaining a secure and waterproof seal. (1) • The automated process allows large quantities to be manufactured quickly and consistently. (1) • Produces a robust casing that is impact-resistant, protecting internal components from damage. (1) • Moulding allows for seamless construction, reducing weak points where water could enter. (1) • Once the mould is created, unit costs are low, making it ideal for large-scale production. (1) • Excess plastic can often be recycled, improving sustainability and reducing costs. (1) Credit any other valid responses.	3		3

© WJEC CBAC Ltd 2025.

Question		Answer	AO1	AO2	Total Mark
3.	(a) (i)	Complete the sentence below by selecting the correct component from the list. The automatic doors use a …… which work by detecting movement.			
		Award **one** mark for: • Proximity sensor.		1	1
	(ii)	Correctly label the block diagram.			
		Award **one** mark for each correct response. Responses must be in the correct order of INPUT – PROCESS - OUTPUT: • Input • Process • Output	3 x 1		3
	(iii)	Give **two** reasons why a designer or engineer might use a block diagram.			
		Award **one** mark each for **two different** reasons within the response, based on: • Simplistic method of visualising. (1) • Map out a circuit before designing. (1)	2 x 1		2
	(b)	Study the flowchart below for the automatic airport door. Type the correct programming statements into each of the boxes below.			
		Award **one** mark for each programming statement. Answers must be in the correct order: • Proximity sensor active? • Motor turn to open • Proximity sensor active? • Motor turn to close. NB. Candidates should be awarded marks if wording is slightly different however, but implies the same, for example: • is sensor active? • doors open • proximity sensor? • doors close.		4 x 1	4

© WJEC CBAC Ltd 2025.

	(c)	The diagram below shows the rack and pinion used to move the automatic door. The Spur Gear is 55mm in radius. Calculate the distance in millimetres (mm) the door will move in one rotation of the gear.			
		Award **one** mark for: • Circumference of a circle = π x diameter • Radius= 55 therefore, diameter = 55 x 2 = 110 Award **one** mark for: • Circumference of a circle = 3.142 x 110 • 3.142 x 55 (reward 1 mark ONLY for π x radius) Award **one** mark for: • Circumference of a circle = 345.62 mm NB: Accept answers that are close to this figure. (22/7 x110 = 345.72) You must allow for scientific calculators which have a higher degree of accuracy for π.		3 x 1	3
	(d)	Explain why aluminium has been used for the automatic door frame.			
		Answers that explain the use of aluminium should be awarded up to **three** marks, based on: • It is lightweight. (1) • It reduces strain on the motor mechanism. (1) • It provides structural stability / It resists bending and warping. (1) • It naturally resists rust. (1) • It requires minimal upkeep compared to other metals like steel. (1) • It can be anodised or powder-coated for a modern and sleek finish. (1) • It is more affordable than some other metals while offering excellent performance. (1) • Environmentally friendly, as it can be reused without losing quality. (1) Credit any other valid responses.		3	3

© WJEC CBAC Ltd 2025.

Question		Answer	AO1	AO2	Total Mark
4	(a)	Select the correct missing stages of the Product Life Cycle from the drop-down boxes.			
		Award **one** mark each for responses in this order: • Growth (second box) • Decline (final box).	2 x 1		2
	(b) (i)	State what is meant by the term 'obsolescence' in the life of a product.			
		Answers that indicate an understanding of obsolescence should be awarded up to **two** marks, based on: • When a product comes to the end of its useful like/Product Life Cycle. (1) • It will be discarded. (1) • A new product will be needed to replace it or it will be discontinued. (1) Credit any other valid responses.		2	2
	(ii)	Explain **one** advantage and **one** disadvantage of planned obsolescence to the manufacturer.			
		Answers that explain an advantage of planned obsolescence to the manufacturer should be awarded up to **two** marks, based on: **Advantages:** • It encourages customers to buy newer models regularly (1). This ensures continuous profit. (1) • It drives ongoing product development. (1) This in turn drives technological advancements. (1) • It helps manufacturers influence purchasing cycles. (1) This ensures that demand for the product remains high. (1) • It's easier to forecast sales. (1). Therefore, companies can plan manufacturing schedules efficiently. (1) • Customers familiar with a product line may prefer to upgrade within the same brand. (1). This ensures continuous profit. (1) Answers that explain a disadvantage of planned obsolescence to the manufacturer should be awarded up to **two** marks, based on: **Disadvantages:** • Customers may feel frustrated if products become outdated too quickly. (1) This could lead to negative reviews. (1) • Consumers may switch to brands offering longer-lasting products. (1). This would be harmful to the manufacturer in terms of profit and brand loyalty. (1) • More waste is generated. (1) This could lead to criticism from consumers and potential regulatory issues. (1)		2 x 2	4

© WJEC CBAC Ltd 2025.

		More complaints, warranty claims, and repair requests may arise. (1). This would affect brand reputation and profit margins. Credit any other valid responses.			

© WJEC CBAC Ltd 2025.

Question		Answer	AO1	AO2	Total Mark
5	(a) (i)	Label the image of the pillar drill by matching the part names below.			
		Award **one** mark for each of the following responses in the correct order: • Emergency stop • Chuck • Table.	3 x 1		3
	(ii)	The drill in the video clip has been set to a slow speed. Explain why this slow speed has been selected.			
		Answers that indicate an understanding of drilling should be awarded up to **three** marks, based on: • High speeds generate more friction. (1) This can overheat the drill bit, causing it to dull quickly. (1) • A lower speed allows for more precise drilling. (1) This reduces the risk of the bit slipping. (1) • Drilling too fast can cause the metal to harden due to excessive heat. (1) This makes it harder to drill through. (1) • Slower speeds help preserve the sharpness. (1) This increases the lifespan of the drill bit. (1) Credit any other valid responses.		3	3
	(b) (i)	Give **two** disadvantages of using mild steel for the bottle opener.			
		Award **one** mark each for **two different** advantages noted within the response, based on: • It requires regular maintenance. (1) • It requires a protective coat to prevent rusting. (1) • It has limited strength compared to other materials like stainless steel. (1) • It can bend or deform under heavy use. (1) • It is less resistant to wear and tear. (1) • If used frequently to open bottles it would become less effective over time. (1) • Mild steel can have an unattractive appearance when not properly finished or treated. (1) • It can develop a dull or uneven surface. (1) Credit any other valid responses.	2 x 1		2

© WJEC CBAC Ltd 2025.

<table>
<tr><td></td><td>(ii)</td><td colspan="4">Explain the suitability of plastic coating for the bottle opener handle</td></tr>
<tr><td></td><td></td><td>Answers that explain the suitability of plastic coating should be awarded up to three marks, based on:
• The plastic coating on the mild steel body helps protect it from moisture. (1) This reduces the risk of rust and corrosion. (1)
• The plastic coating provides an extra layer of protection against wear and tear. (1) This helps it to maintain the structural integrity of the mild steel body of the bottle opener over time. (1)
• The plastic coating on the handle and main body enhances the user's grip. (1) This makes it easier and more comfortable to use the bottle opener, especially in wet or slippery conditions. (1)

Credit any other valid responses.</td><td></td><td>3</td><td>3</td></tr>
<tr><td></td><td>(iii)</td><td colspan="4">Use the principle of moments to calculate how much force (F) the user must apply to open the bottle if 200N at the bottle cap is sufficient to remove the lid.</td></tr>
<tr><td></td><td></td><td>Award a maximum of five marks based on the following calculations:

<table><tr><td>Taking moments through force/point R</td><td>1 mark</td></tr><tr><td>Clockwise moments = 200*20</td><td>1 mark</td></tr><tr><td>Anti-clockwise moments = 100*F</td><td>1 mark</td></tr><tr><td>Correctly rearranging formula:
$\frac{200*20}{100} = F$</td><td>1 mark</td></tr><tr><td>Correct answer: F= 40 N or greater</td><td>1 mark</td></tr></table></td><td>5 x 1</td><td></td><td>5</td></tr>
</table>

© WJEC CBAC Ltd 2025.

Question		Answer	AO1	AO2	Total Mark
6	(a) (i)	Drag-and-drop **two** of the electronic symbols to complete the transistor dark sensor circuit below.			
		Award **one** mark each for the following responses, up to a maximum of **two** marks: 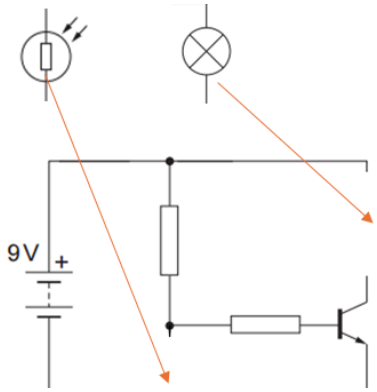 	2 x 1		2
	(ii)	Give **two** reasons for the purpose of the transistor in the warning lamp circuit.			
		Award **one** mark each for **two different** reasons noted within the response, based on: • Works as a switch (1) • Works as an amplifier. (1)	2 x 1		2
	(iii)	Give **two** reasons why polypropylene is a suitable material for the bicycle safety lamp casing.			
		Award **one** mark each for **two different** reasons noted within the response, based on: • Easily moulded into complex shapes. (1) • The material can be manufactured to tight tolerances. (1) • It's durable and can absorb impact. (1) • It offers protection to the lamp's internal components if dropped or exposed to rough handling. (1) • It's resistance to chemicals makes it suitable for environments where the safety lamp may encounter oils, fuels, or other corrosive substances. (1) • Polypropylene is a lightweight material. (1) • It offers electrical insulation. (1) • It has a degree of UV resistance. (1) Credit any other valid responses.	2 x 1		2

© WJEC CBAC Ltd 2025.

	(b) (i)	Give **one** benefit to the designer of using CAD (Computer aided design) to develop the bicycle safety light.			
		Award **one** mark for any acceptable benefit of CAD. Answers may include • The designer can use CAD to test the circuit to see if it works. (1) • The designer can save and edit the CAD model easily and quickly. (1) • The designer can share the CAD file within / outside the organisation. (1) • The designer can create a prototype based on the CAD data. (1) • The CAD file could be transferred to CAM data for rapid prototyping a part / product. (1) Credit any other valid responses.		1	1
	(ii)	Explain **two** important safety considerations when using an etching tank to manufacture a PCB.			
		Award up to maximum of **two** marks each for **two different** safety considerations explained within the response, based on: • The manufacturer must wear suitable Personal Protective Equipment (PPE). (1) This means that gloves, safety googles, and a lab coat must be worn to prevent chemical exposure. (1) • Proper ventilation must be ensured. (1) This is vital in order to avoid inhaling harmful fumes from etching chemicals. (1) • Correct chemical handling procedures must be in place. (1) Appropriate containers must be used to avoid direct contact with etchants like ferric chloride. (1) • Spill management is an important consideration. (1) Neutralising agents (e.g. baking soda for acids) must be kept nearby and spills must be cleaned immediately. (1) • Disposal of used etchant solutions is vital. (1), It is important that environmental regulations are followed correctly. (1) • Electrical safety. (1) It is important to keep electrical equipment away from liquids to prevent shocks. (1) • Work area organisation is key. (1) A clean, uncluttered space must be maintained to reduce the risk of accidents. (1) • Emergency preparedness. (1) It is important to have an eyewash station and first aid kit readily available in case of exposure. (1) Credit any other valid responses.	2 x 2		4

© WJEC CBAC Ltd 2025.

	(iii)	Compare surface-mount technology (SMT) and through-hole technology (THT) for manufacturing PCBs in mass.		
		Answers that compare surface-mount technology (SMT) and through-hole technology (THT) for manufacturing PCBs in mass should be awarded up to **five** marks, based on:	5	5

Aspect	Surface-Mount Technology (SMT)	Through-Hole Technology (THT)
Component Size	Smaller, lighter components	Larger, bulkier components
Assembly Speed	Faster automated placement	Slower, often requires manual soldering
Production Cost	Lower due to automation	Higher due to labour-intensive process
Board Density	Higher component density, allowing compact PCBs	Lower density, requiring more space
Mechanical Strength	Weaker mechanical bonds, less suitable for high-stress environments	Stronger physical connections, ideal for high-vibration conditions
Repairability	More difficult due to small components	Easier, as components can be manually replaced
Best Use Cases	Consumer electronics, high-volume manufacturing	Aerospace, military, and high-power applications

Guidance for markers:

Band	AO2
3	**5 marks** • an excellent response, with fully detailed comparisons • excellent discussion linked to several of the above aspects
2	**3-4 marks** • a good response, with detailed comparisons • good discussion linked to a few of the above aspects
1	**1-2 marks** • a limited response, with little or no comparison • limited discussion of the above aspects
0	**0 marks** • no response attempted or incorrect response

© WJEC CBAC Ltd 2025.

Mapping of questions to specification content and assessment objectives:

Unit 1 – Engineering Design (Core Knowledge and Information)

Question			Mark allocation							
			Topic and Section					Total Marks	AO1 Marks	AO2 Marks
			1.1.1	1.1.2	1.1.3	1.1.4	1.1.5			
1	(a)				✓			2	**2**	
	(b)	(i)			✓			2	**2**	
		(ii)				✓		1	**1**	
		(iii)				✓		3		**3**
2	(a)						✓	3		**3**
	(b)	(i)					✓	2	2	
		(ii)			✓			2	2	
		(iii)			✓			3		**3**
2	(c)	(i)						1	1	
		(ii)						2		**2**
		(iii)						3	3	

© WJEC CBAC Ltd 2025.

3	(a)	(i)						1		1
		(ii)						3	3	
		(iii)						2	2	
	(b)							4		4
	(c)							3		3
	(d)							3		3
4	(a)				✓			2	2	
	(b)	(i)			✓			2		2
		(ii)			✓			4		4
5	(a)	(i)						3	3	
		(ii)						3		3
	(b)	(i)						2	2	
		(ii)						3		3
		(ii)						5	5	
6	(a)	(i)						2	2	
		(ii)						2	2	
		(iii)		✓				2	2	
	(b)	(i)	✓					1		1
		(ii)						4	4	
		(iii)						5		5

© WJEC CBAC Ltd 2025.

Unit 1 – Engineering Design (In-Depth)

Question			Mark allocation										
			Topic and Section								Total Marks	AO1 Marks	AO2 Marks
			1.1.6	1.1.7	1.1.8	1.1.9	1.1.10	1.11	1.12	1.1.13			
1	(a)										2	**2**	
	(b)	(i)									2	**2**	
		(ii)									1	**1**	
		(iii)									3		**3**
2	(a)										3		**3**
	(b)	(i)									2	2	
		(ii)									2	2	
		(iii)									3		**3**
2	(c)	(i)			✓						1	1	
		(ii)								✓	2		**2**
		(iii)		✓							3	**3**	
3	(a)	(i)				✓					1		**1**
		(ii)				✓					3	**3**	
		(iii)				✓					2	**2**	
	(b)					✓					4		**4**
	(c)						✓				3		**3**

© WJEC CBAC Ltd 2025.

	(d)		✓								3		**3**
4	(a)										2	**2**	
	(b)	(i)									2		**2**
		(ii)									4		**4**
5	(a)	(i)	✓								3	**3**	
		(ii)	✓								3		**3**
	(b)	(i)					✓				2	**2**	
		(ii)						✓			3		**3**
		(iii)					✓				5	**5**	
6	(a)	(i)				✓					2	**2**	
		(ii)				✓					2	**2**	
		(iii)									2	**2**	
	(b)	(i)									1		**1**
		(ii)								✓	4	**4**	
		(iii)								✓	5		**5**

© WJEC CBAC Ltd 2025.