GCSE

WJEC GCSE Integrated Science (Single Award)

Approved by Qualifications Wales

Sample Assessment Materials

Unit 1: Living on Earth - Resource Folder

Teaching from 2026
For award from 2028



This Qualifications Wales regulated qualification is not available to centres in England.

Made for Wales.
Ready for the world.

WJEC would like to thank the students and teachers of Fitzalan High School, Cardiff and Llanwern High School, Newport for their participation in the creation of these covers.

GCSE

INTEGRATED SCIENCE (Single Award)

UNIT 1: LIVING ON EARTH

RESOURCE FOLDER

Centres will receive copies of the pre-release Resource Folder one month before the examination.

Candidates are not permitted to take an annotated copy of the pre-release Resource Folder into the examination.

Candidates will be given a ‘clean’ copy of the pre-release Resource Folder along with the examination question paper.

© WJEC CBAC Ltd 2025.

Using the Earth's Resources

Concerns about the limited raw materials available on Earth has led to moves away from using fossil fuels and using renewable sources instead.

Until recently, fossil fuels were the major source of electricity generation. Fractional distillation of crude oil provides the oil used in electricity generation and also fuels used by transport.

Electricity Generation

Figure 1 shows the energy sources used for electricity generation in 2016.

Figure 1

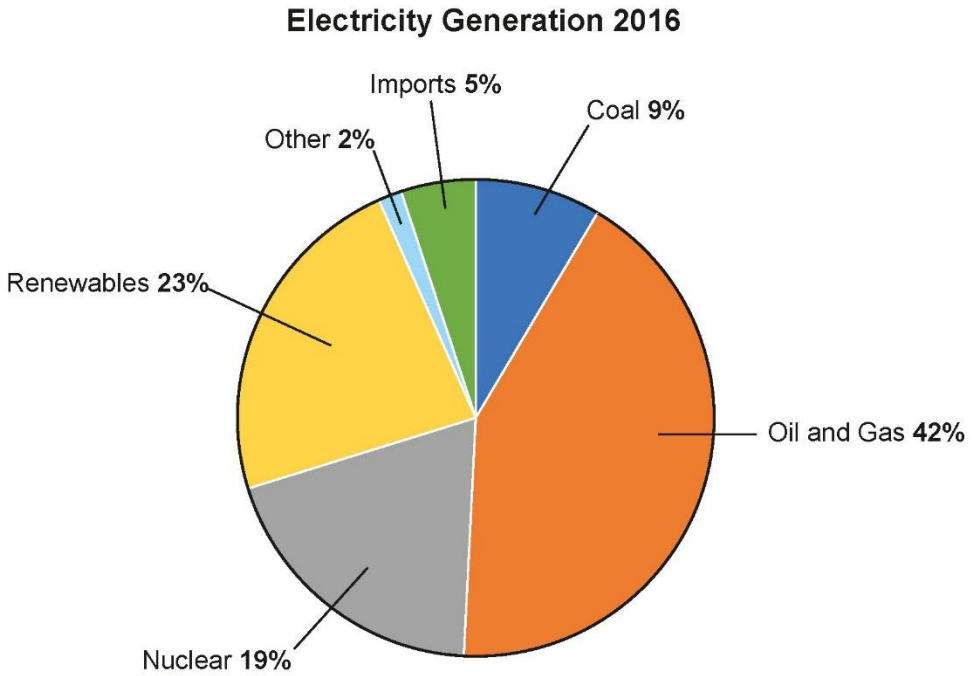

© WJEC CBAC Ltd 2025.

Fractional Distillation of crude oil

The oil used in power stations is extracted from crude oil.

Crude oil (petroleum) is a mixture of compounds called hydrocarbons which can be separated into fractions in a fractionating column.

This is shown in **Figure 2.**

Figure 2

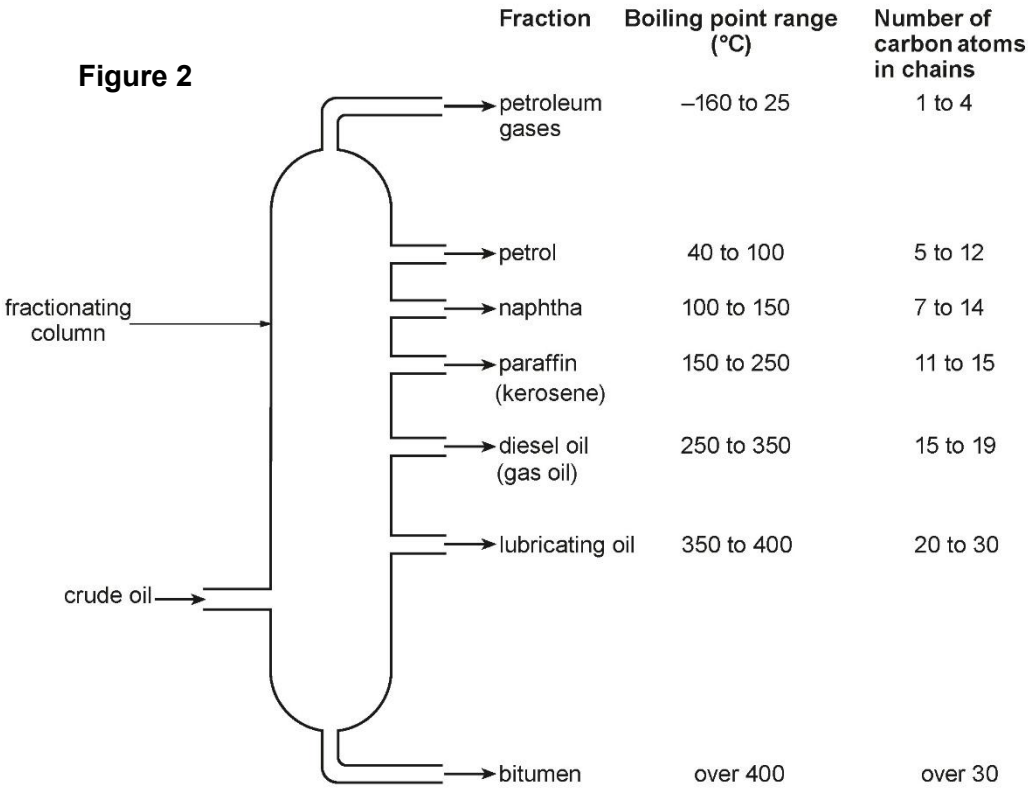

© WJEC CBAC Ltd 2025.

Renewable Energy Sources

Since 2016, more electricity is produced from renewable sources.

This will help to reduce the number of fossil fuel-fired power plants.

The UK government is committed to reaching net zero by 2050.

To reach the net zero target by 2050, 90% of the electricity produced in the UK should come from renewable energy sources.

Figure 3 shows how supply from different renewable technologies in the UK could change between 2010 and 2050.

To meet consumer demand, the mean maximum power generated every year by all sources is currently 34 GW.

Figure 3

	2010	2020	2030	2040	2050
	Electricity generated (GW)				
Pumped hydroelectric	2	2	3	3	3
Biomass	0	1	1	2	2
Wind	2	5	8	12	18
Geothermal	0	1	1	1	1
PV solar	1	3	4	4	5
Wave energy	0	1	1	2	2
Total	**5**	**13**	**18**	**24**	**31**

© WJEC CBAC Ltd 2025.

Using Biomass

The biomass of plants is used to make pellets.

Biomass pellets can be burned instead of fossil fuels to heat water in a biomass generator for the production of electricity. **Figure 4** shows information about some plants that could be used to make biomass pellets.

Figure 4

Plant	Crop yield in a year from each km^2 of land (tonnes)	Energy stored per tonne (units)
poplar	8	18
willow	10	20
grass	5	16

© WJEC CBAC Ltd 2025.

Using Wind

Figure 5 below illustrates how the output power from a wind turbine varies with steady wind speed.

Figure 5

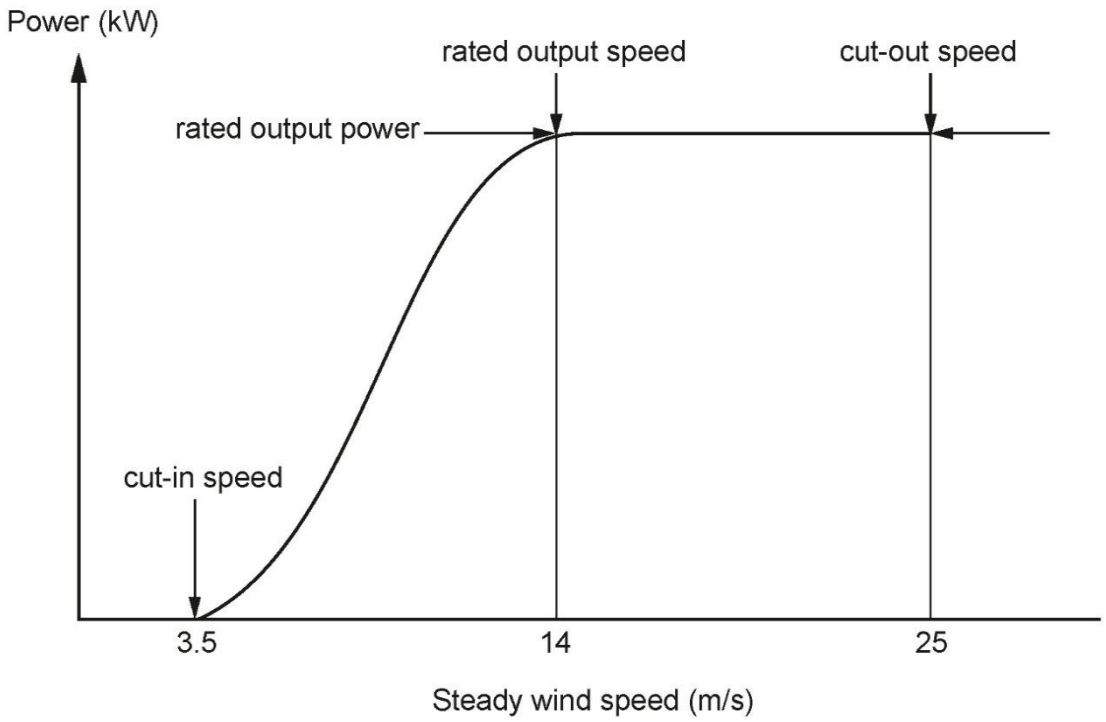

Cut-in speed

This is the speed at which the turbine starts to rotate and generate power. It is typically between 3 and 4 m/s.

Rated output power and rated output speed

Between 12 and 17 m/s, the output power reaches the maximum limit. This limit is called the **rated output power**.

The wind speed at which it is reached is called the **rated output speed.**

Cut-out speed

As the speed increases there is a risk of damage to the rotor.

As a result, a braking system is employed to bring the rotor to a standstill.

This is called the **cut-out speed** and is usually around 25 m/s.

© WJEC CBAC Ltd 2025.

Comparing wind and nuclear power

Figure 6 gives information about generating electricity from wind and nuclear power.

Figure 6

How they compare		
	A wind turbine	A nuclear power station
Overall cost of generating electricity (p/kWh)	5.6	2.8
Maximum power output (MW)	2	3600
Lifetime (years)	15	45
Waste produced	None	Radioactive waste
Lifetime of carbon footprint (g of CO_2/kWh)	4.64 / 5.25 (onshore / offshore)	5
Commissioning cost (£ million)	3	4000

© WJEC CBAC Ltd 2025.

Manufacturing and using Solar Panels

Figure 7 gives information about the materials used in the manufacture of PV solar panels.

Not all of the materials are naturally occurring and some have to be manufactured.

For example, silicon does not exist naturally. It is most commonly found as silica which is an oxide of silicon.

Figure 7

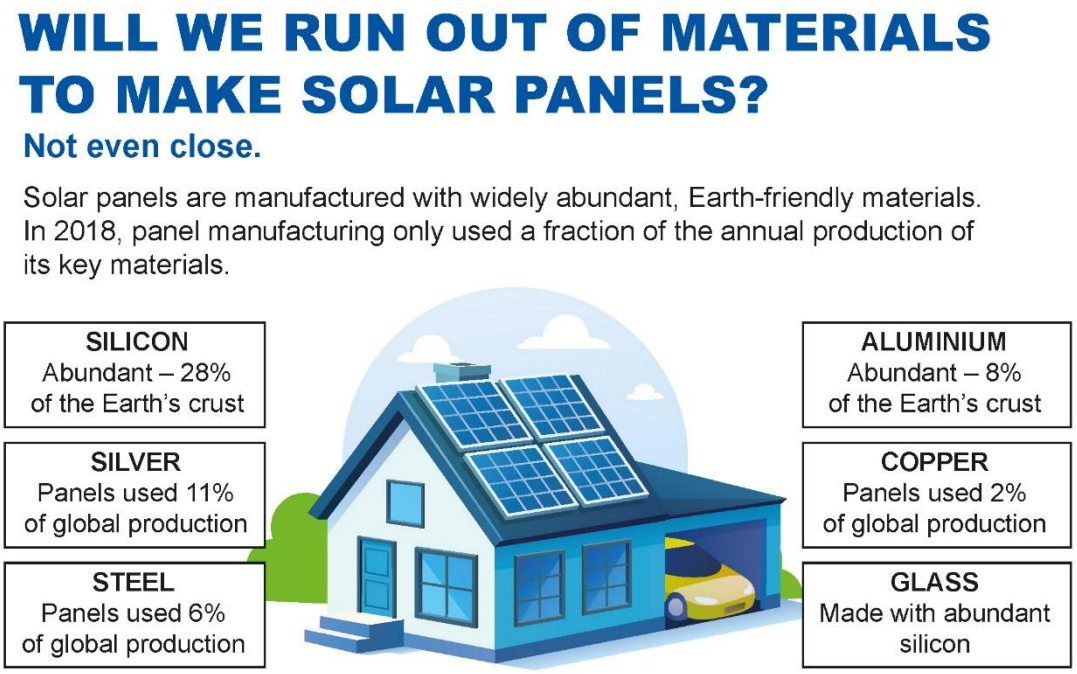

A manufacturer of PV panels makes the following claims about their use.

- Maximum power output = 1.2 kW/m^2
- Efficiency of converting sunlight to electrical power = 30 %

© WJEC CBAC Ltd 2025.