GCSE

WJEC GCSE Integrated Science (Single Award)

Approved by Qualifications Wales

Sample Assessment Materials

Unit 3: Scientific Enquiry

Teaching from 2026
For award from 2028



This Qualifications Wales regulated qualification is not available to centres in England.

Made for Wales.
Ready for the world.

WJEC would like to thank the students and teachers of Fitzalan High School, Cardiff and Llanwern High School, Newport for their participation in the creation of these covers.

Contents

Assessment Arrangements Pack	1
Unit 3a Question Paper	12
Unit 3b Question Paper	25
Mark Schemes	41

Copyright
© WJEC CBAC Limited 2025.

WJEC GCSE Integrated Science (Single Award)

Assessment Arrangements Pack

Unit 3: Scientific Enquiry

Information for teachers and technicians

First assessment Spring term 2028

© WJEC CBAC Ltd 2025.

About this pack: information for teachers and technicians

This pack contains the assessment instructions for Unit 3: Scientific Enquiry (Unit 3a, Unit 3b).

Within this pack, you will find information for teachers and technicians on how to manage arrangements for assessment.

Managing the assessment

This is a WJEC marked (external) assessment.

Key documentation / dates

Document	Purpose	Format	Date received	Date for use
Apparatus List	Enables centres to prepare for the task by ordering in any additional apparatus if needed. The title of the task is not included.	Post	September	Upon receipt
Enquiry Methods	Enables teachers/technicians at centres to view and trial the methodology.	Post	Autumn term	First day of the spring term
Assessments	Two assessments. Candidates must complete one of these assessments.	Post and Portal	Autumn term (for secure storage on receipt in preparation for the assessment during the spring term)	Spring term. Must only be opened on the first day of the assessment as chosen by the centre.

All documents must be stored securely by the centre. Appropriate check-out and check-in procedures must be established for these documents when they are being used by science teachers or technicians. A log must be maintained to record all instances of usage. These documents must not be stored within the science department when not actively in use by a teacher or technician.

To maintain the confidentiality, the assessments can only be given to the teacher conducting the assessments on the date(s) on which each group will complete each particular assessment.

Task setting

These assessments have been produced by WJEC and cannot be changed.
Centres must choose one enquiry from a choice of two for candidates to complete.

© WJEC CBAC Ltd 2025.

Time

The assessment window runs from any school day in January or February (in the first half of the spring term) in the final year of study.

Candidates must be allowed **2 hours** to complete each assessment. For each assessment, candidates should spend:

- 1 hour completing Task A (practical task)
- 1 hour completing Task B (written response).

Centres may schedule the tasks at their discretion during the assessment window. There can be no changes to the timings for this assessment.

Resources

Task A - Candidates must have access to the question paper and any necessary apparatus and resources – one set of apparatus per group. Task A must be collected from the candidates at the end of session and returned to the exams officer for secure storage.

Task B - Candidates should have access to their Task A question paper, as they need the results obtained in the first session to answer the questions in Task B. Task B should not be given to candidates until the second session.

Both sections should be collected in following the completion of Task B and returned to the exams officer.

Collaboration

Task A - Group work is allowed. Candidates to work in small groups, of no more than three candidates. Teachers should ensure that each group has adequate working space and that the groups are set a reasonable distance apart.

Task B - Group work is **not** allowed. Candidates must complete all Task B individually.

Supervision

Task A - Candidates must be supervised by science teachers whilst completing the activities. Centres may use additional laboratories, provided that a science teacher is available to always supervise all groups. Technical support should be available in case it is needed.

Task B - This must be carried out under direct supervision. This is a high level of control, i.e. candidates work individually, set a suitable distance apart and under supervision. This could be carried out in the laboratory or in an examination hall.

Monitoring visits will take place using a random sample of centres to ensure the assessment unit is being administered correctly. WJEC will contact selected centres in advance of such a visit to clarify arrangements.

Authentication

Supervision must be in place to ensure the authenticity of evidence produced for summative assessment.

© WJEC CBAC Ltd 2025.

Teachers should not provide input or guidance to candidates during the assessment time. This includes providing formative feedback on the evidence being produced.

All candidates must attempt to obtain results in Task A. In exceptional circumstances where a candidate is unable to obtain results using the practical equipment, it is acceptable for them to be provided with unformatted teacher-generated results. WJEC will not supply these results; they must be generated by the centre during the task trial.

Please ensure that the unformatted results are noted and included in the submission for the candidates who were provided with this data.

Task marking

WJEC will mark all evidence produced by candidates.

Further information

Any access arrangements a candidate is entitled to for the written examination units apply to this Scientific Enquiry assessment also. Please ensure that WJEC are made aware of any modified papers that are required by candidates as soon as possible.

© WJEC CBAC Ltd 2025.

Apparatus lists

Unit 3a

Apparatus Required

The following apparatus is required for each group: (each group should consist of no more than three candidates).

2 × clamp and stand
12 × paper straw each of 35 cm length
10 × 100 g mass
1 × 100 g mass holder
1 × 30 cm ruler
1 × pencil
1 × scissors

Diagram

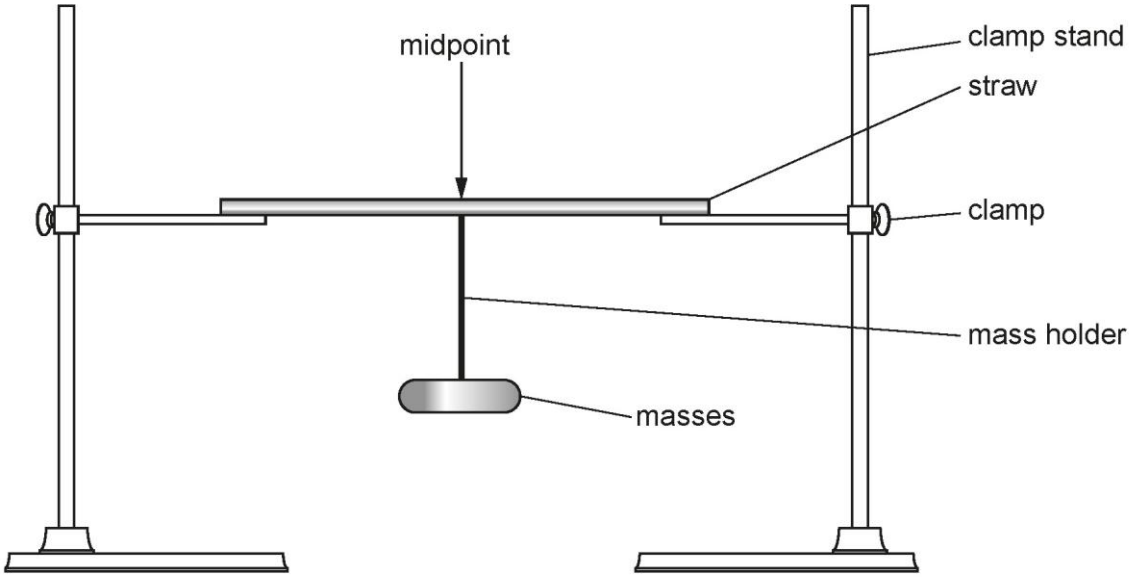

© WJEC CBAC Ltd 2025.

Unit 3b

Apparatus required

The following apparatus is required for each group: (each group should consist of no more than three candidates).

eye protection
compounds **A, B, C, D** (approximately 3 g each)
50 cm^3 of 0.02mol/dm^3 limewater
5 cm^3 of 0.1 mol/dm^3 nitric acid
10 cm^3 of 0.5 mol/dm^3 barium chloride solution
50 cm^3 of 0.5 mol/dm^3 hydrochloric acid
10 cm^3 of 0.1 mol/dm^3 silver nitrate solution
50 cm^3 of deionised water
4 × dropping pipette
Bunsen burner
heatproof mat
4 × boiling tubes
1 × bung and delivery tube
10 × damp wooden splints
12 × test tubes
4 × spatulas
5 × 10 cm^3 measuring cylinder

Access to:
waste bowl.

© WJEC CBAC Ltd 2025.

Enquiry Methods (for the purpose of trialling the tasks only)

Unit 3a

Apparatus Required

2 × clamp and stand
12 × paper straw each of 35 cm length
10 × 100 g mass
1 × 100 g mass holder
1 × 30 cm ruler
1 × pencil
1 × scissors

Diagram

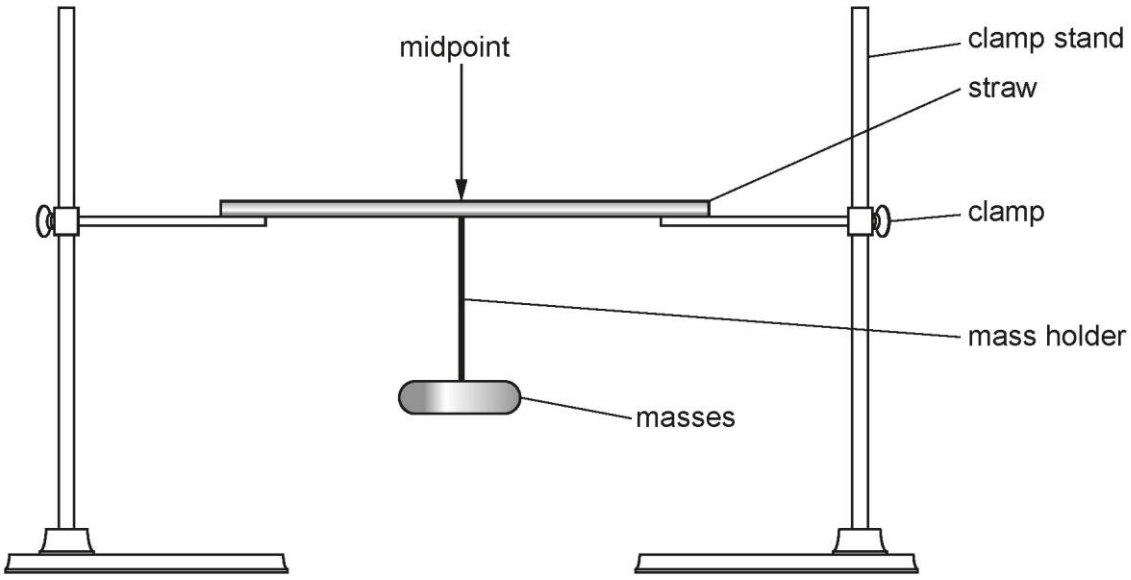

© WJEC CBAC Ltd 2025.

Method

1. Set up the clamp stands as shown in the diagram.

2. Take a 35 cm straw and use a ruler to find the midpoint. Mark this in pencil.

3. Place the straw so each end sits on top of a clamp. The straw represents a bone.

4. Hang a 100 g mass holder on the midpoint of the straw.

5. Keep adding 100 g masses to the mass holder until the straw bends. This represents the bone breaking.

6. Record the mass at which the straw bends.

7. Repeat steps 2–6 two more times to get a total of three results. Use a new straw each time.

8. Repeat steps 2–7 for straws with a length of 30 cm, 25 cm, 20 cm, 15 cm and 10 cm. Cut 35 cm straws to make these lengths. Move the clamps closer together each time to ensure the length of straw resting on the clamp remains the same.

© WJEC CBAC Ltd 2025.

Unit 3b

Apparatus Required

eye protection
compounds **A, B, C, D** (approximately 3 g each)
50 cm^3 of 0.02mol/dm^3 limewater
5 cm^3 of 0.1 mol/dm^3 nitric acid
10 cm^3 of 0.5 mol/dm^3 barium chloride solution
50 cm^3 of 0.5 mol/dm^3 hydrochloric acid
10 cm^3 of 0.1 mol/dm^3 silver nitrate solution
50 cm^3 of deionised water
4 × dropping pipette
Bunsen burner
heatproof mat
4 × boiling tubes
1 × bung and delivery tube
10 × damp wooden splints
12 × test tubes
4 × spatulas
5 × 10 cm^3 measuring cylinder

Access to:
waste bowl.

© WJEC CBAC Ltd 2025.

Method

Wear eye protection.

Part 1: Metal Ion Test

1. Dip a damp wooden splint into compound **A**. Carry out a flame test by placing the end of the splint into a roaring Bunsen flame and record the colour seen.

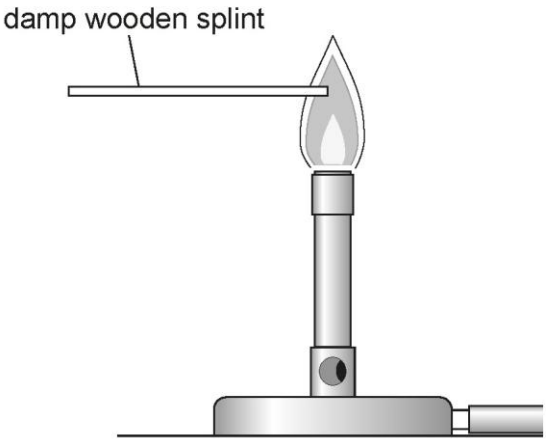

2. Repeat step 1 with compounds **B**, **C** and **D**.

Part 2: Halide Ion Test

1. Add half a spatula of compound **A** to a test tube.

2. Add water to the test tube until half-full.

3. Add one pipette of nitric acid to the test tube.

4. Add two pipettes of silver nitrate solution to the test tube and record the colour of any precipitate formed.

5. Repeat steps 1 to 4 with compounds **B**, **C** and **D**.

Part 3: Sulfate Test

1. Add half a spatula of compound **A** to a clean test tube.

2. Add water to the test tube until half-full.

3. Add two pipettes of barium chloride solution to the test tube and record the colour of any precipitate formed.

4. Repeat steps 1 to 3 with compounds **B**, **C** and **D**.

© WJEC CBAC Ltd 2025.

Part 4: Carbonate Test

1. Set up the apparatus as shown below.

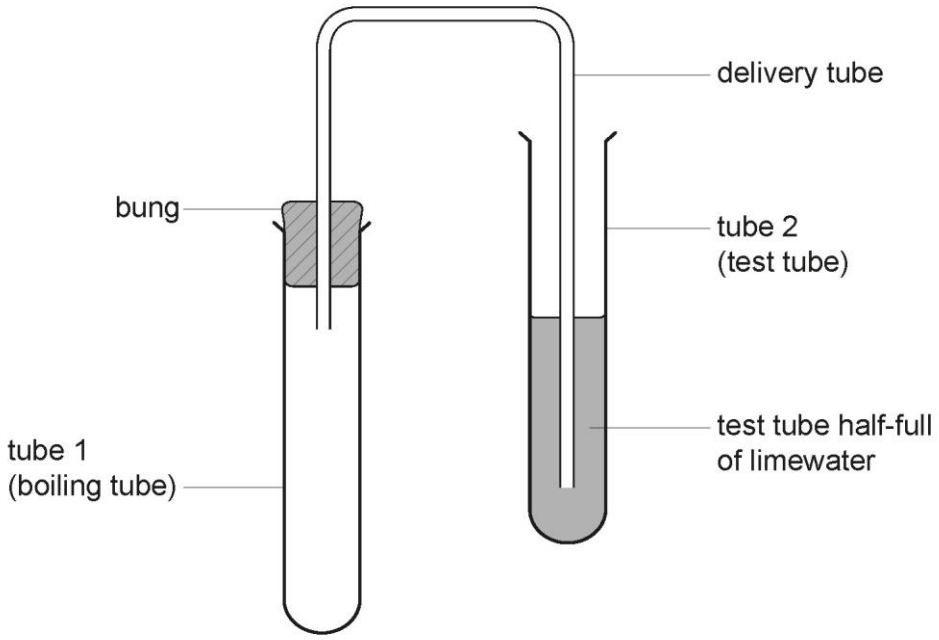

2. Place a spatula of compound **A** into tube 1.

3. Add 10 cm^3 of dilute hydrochloric acid to tube 1 and quickly replace the bung. Record your observation of what happens to the limewater in tube 2.

4. Repeat steps 1 to 3 with compounds **B**, **C** and **D**.

© WJEC CBAC Ltd 2025.

Surname	Centre number	Candidate number
First name(s)		0

GCSE

GCSE Integrated Science (Single Award) – Unit 3a

3450U3
SCIENTIFIC ENQUIRY

INVESTIGATING THE STRENGTH OF BONES

Task A
1 hour

SAMPLE ASSESSMENT MATERIALS

ADDITIONAL MATERIALS

A calculator and ruler.

INSTRUCTIONS TO CANDIDATES

Use black ink or black ball-point pen. Do **not** use gel pen or correction fluid.

You may use a pencil for graphs and diagrams only.

Write your name, centre number and candidate number in the spaces provided at the top of this page.

Answer **all** questions.

Write your answers in the spaces provided in this booklet. If you run out of space, use the additional page(s) at the back of the booklet, taking care to number the question(s) correctly.

For examiner's use only		
Question	**Maximum mark**	**Mark awarded**
Task A	**6**	

INFORMATION FOR CANDIDATES

This assessment is in 2 sections, Task A and Task B. You will complete Task A in one session and Task B in a different session.

The total number of marks available for Task A is **6**.

The number of marks is given in brackets at the end of each question or part-question.

© WJEC CBAC Ltd 2025.

Introduction

Some people have weak bones due to poor diet – they don't eat enough essential minerals such as calcium, magnesium, and potassium, which are needed for maintaining strong and healthy bones. Other factors that can affect the strength of bones are how much you exercise and lifestyle factors such as smoking.

When too much force is applied to a bone, it can break. This often happens during a fall, where the forces acting on the bone can be very large and sudden, exceeding the bone's ability to withstand them.

Your task is to investigate if the force required to break a bone depends on the bone's length.

Apparatus Required

The following apparatus is required for each group: (each group should consist of no more than three candidates).

2 × clamp and stand
12 × paper straw each of 35 cm length
10 × 100 g mass
1 × 100 g mass holder
1 × 30 cm ruler
1 × pencil
1 × scissors

Diagram

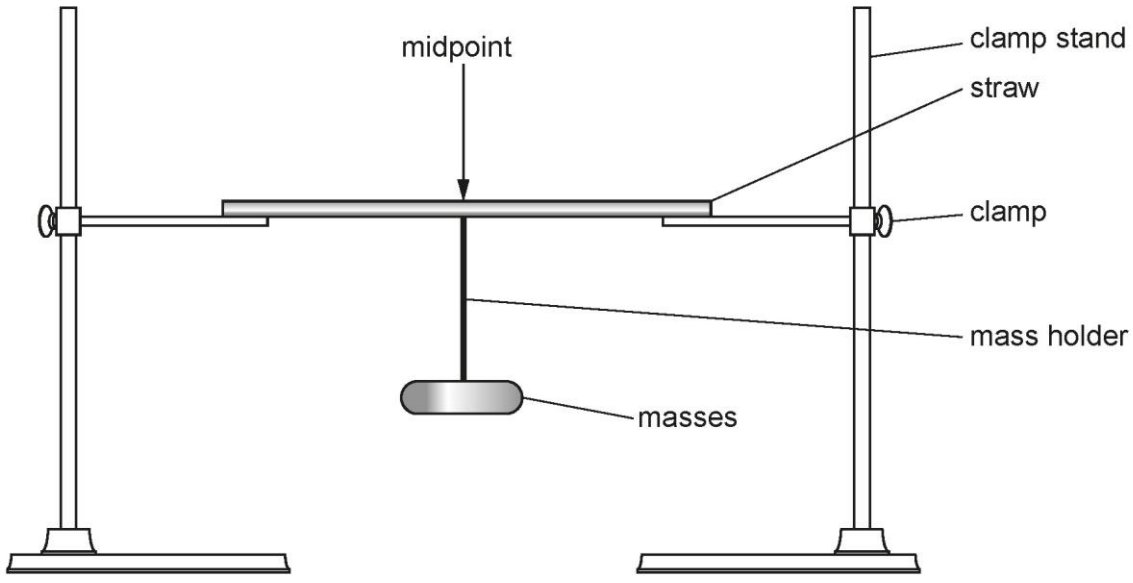

© WJEC CBAC Ltd 2025.

Read the method and answer question 1(a) before carrying out the experiment and recording your results.

Method

1. Set up the clamp stands as shown in the diagram.

2. Take a 35 cm straw and use a ruler to find the midpoint. Mark this in pencil.

3. Place the straw so each end sits on top of a clamp. The straw represents a bone.

4. Hang a 100 g mass holder on the midpoint of the straw.

5. Keep adding 100 g masses to the mass holder until the straw bends. This represents the bone breaking.

6. Record the mass at which the straw bends.

7. Repeat steps 2–6 two more times to get a total of three results. Use a new straw each time.

8. Repeat steps 2–7 for straws with a length of 30 cm, 25 cm, 20 cm, 15 cm and 10 cm. Cut 35 cm straws to make these lengths. Move the clamps closer together each time to ensure the length of straw resting on the clamp remains the same.

© WJEC CBAC Ltd 2025.

TASK A

Answer **all** questions.

1. (a) State a hypothesis for this experiment. [1]

Examiner only

……

……

You may record raw results in the space below.

© WJEC CBAC Ltd 2025.

(b) Present your results in a table. Include all your results. [4]

Examiner only

(c) State the resolution of the ruler used in your experiment. [1]

…….

6

© WJEC CBAC Ltd 2025.

Question number	Additional page, if required. Write the question number(s) in the left-hand margin.
	…… ……

Examiner only

© WJEC CBAC Ltd 2025.

Surname	Centre number	Candidate number
First name(s)		0

GCSE

GCSE Integrated Science (Single Award) – Unit 3a

3450U3
SCIENTIFIC ENQUIRY

INVESTIGATING THE STRENGTH OF BONES

Task B
1 hour

SAMPLE ASSESSMENT MATERIALS

ADDITIONAL MATERIALS

A calculator and your Task **A** exam paper.

INSTRUCTIONS TO CANDIDATES

Use black ink or black ball-point pen. Do **not** use gel pen or correction fluid.

You may use a pencil for graphs and diagrams only.

Write your name, centre number and candidate number in the spaces provided at the top of this page.

Answer **all** questions.

Write your answers in the spaces provided in this booklet. If you run out of space, use the additional page(s) at the back of the booklet, taking care to number the question(s) correctly.

For examiner's use only		
Question	**Maximum mark**	**Mark awarded**
Task B	**22**	

INFORMATION FOR CANDIDATES

This assessment is in 2 sections, Task A and Task B. You will have completed Task A in a previous lesson.

The total number of marks available for Task B is **22**.

The number of marks is given in brackets at the end of each question or part-question.

© WJEC CBAC Ltd 2025.

TASK B

Answer **all** questions.

Examiner only

2. (a) (i) State the independent variable in this experiment. [1]

……

……

(ii) One controlled variable in this experiment is given in the table below.

Complete the table by stating **two** other controlled variables. Describe how each was controlled. [4]

Controlled variable	How it was controlled
Diameter of straw	**All straws were the same diameter**

(b) Use your results from Task **A** to draw a graph of the mass needed to bend the straw (vertical axis) against the straw length (horizontal axis) on the grid opposite. [5]

© WJEC CBAC Ltd 2025.

Examiner only

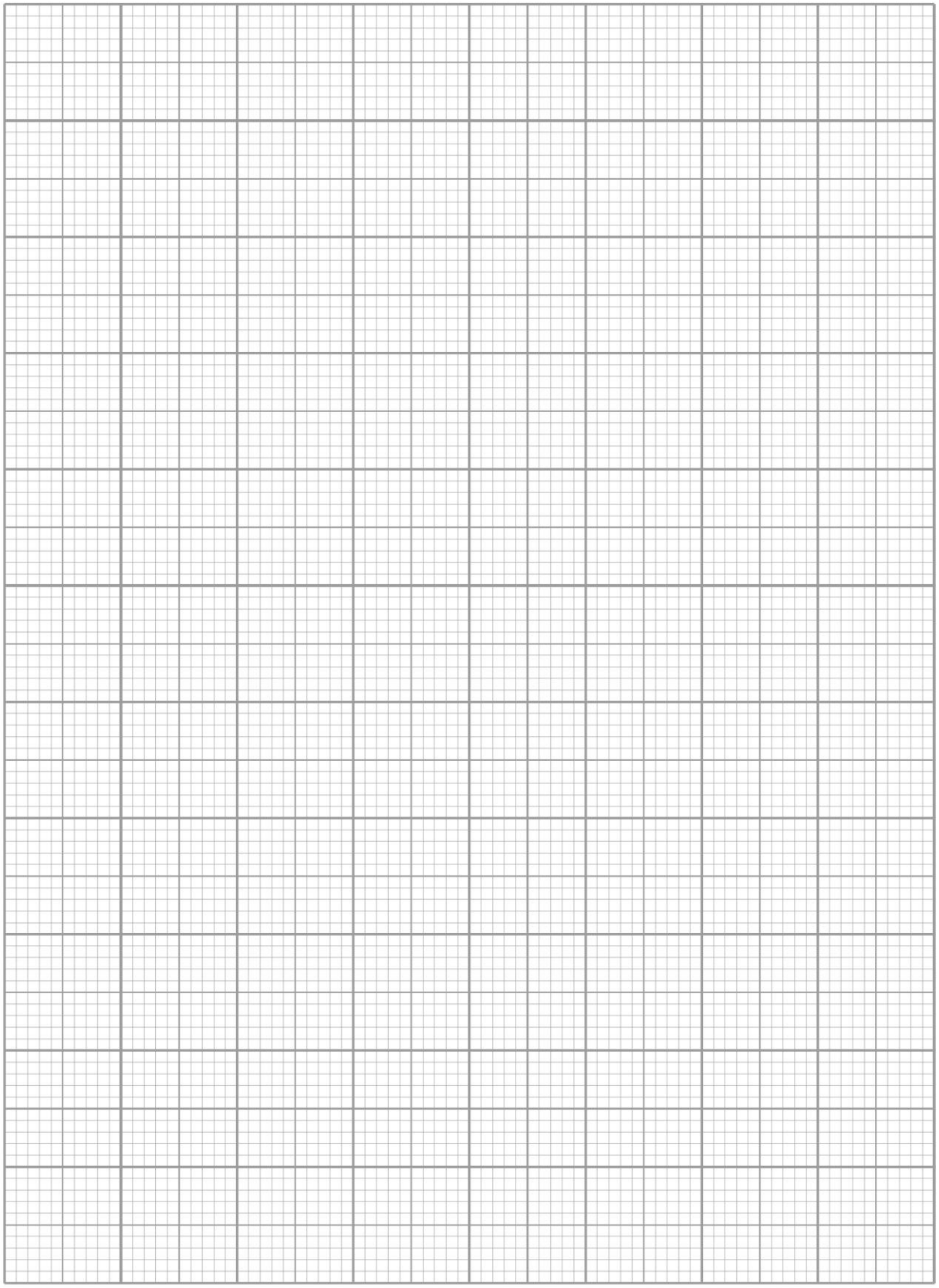

© WJEC CBAC Ltd 2025.

Examiner only

(c) Describe the relationship between the straw length and the mass needed to bend the straw from the graph. [1]

……

……

(d) State what you could do to check the repeatability and the reproducibility of your results. [2]

Repeatability

……

……

Reproducibility

……

……

(e) Another group of pupils carried out a similar investigation to you.
Here are their results.

	Mass needed to break the bone (g)			
Bone length	Trial 1	Trial 2	Trial 3	Mean
30 cm	200	200	200	200
40 cm	100	100	100	100
10 cm	1100	1100	1100	1100
20 cm	700	700	100	500

(i) Circle the anomalous result in the table. State why you have identified this result as being anomalous. [2]

……

……

© WJEC CBAC Ltd 2025.

(ii) Identify **two** mistakes the pupils have made in the table opposite (apart from the anomalous result). Suggest what the pupils should have done instead. [4]

Examiner only

……..

……..

……..

……..

……..

……..

……..

……..

© WJEC CBAC Ltd 2025.

(f) The femur is the longest bone in the human body. It is strong due to its large diameter and is rarely broken.

Describe how you would amend your method in Task **A** to investigate how the diameter of a bone affects its strength. [3]

You will not be expected to carry out this experiment.

Examiner only

22

……

……

……

……

……

……

END OF PAPER

© WJEC CBAC Ltd 2025.

Question number	Additional page, if required. Write the question number(s) in the left-hand margin.
	…… …… ……

Surname	Centre number	Candidate number
First name(s)		0

GCSE

GCSE Integrated Science (Single Award) – Unit 3b

3450U3
SCIENTIFIC ENQUIRY

INVESTIGATING COMPOUNDS USING CHEMICAL ANALYSIS

Task A
1 hour

SAMPLE ASSESSMENT MATERIALS

ADDITIONAL MATERIALS

A calculator and ruler.

INSTRUCTIONS TO CANDIDATES

Use black ink or black ball-point pen. Do **not** use gel pen or correction fluid.

You may use a pencil for graphs and diagrams only.

Write your name, centre number and candidate number in the spaces provided at the top of this page.

Answer **all** questions.

Write your answers in the spaces provided in this booklet. If you run out of space, use the additional page(s) at the back of the booklet, taking care to number the question(s) correctly.

For examiner's use only		
Question	**Maximum mark**	**Mark awarded**
Task A	**6**	

INFORMATION FOR CANDIDATES

This assessment is in 2 sections, Task A and Task B. You will complete Task A in one session and Task B in a different session.

The total number of marks available for Task A is **6**.

The number of marks is given in brackets at the end of each question or part-question.

© WJEC CBAC Ltd 2025.

Introduction

Biologists use chemical tests to monitor our environment. They also test for pollutants like nitrates in rivers to the check the impact of human activity on ecosystems.

Your task is to investigate the composition of four powders by carrying out chemical tests. The compounds that you will test contain a positive ion and a negative ion. Different ions may be in one compound, more than one compound or none of the compounds.

Apparatus Required

The following apparatus is required for each group: (each group should consist of no more than three candidates).

eye protection
compounds **A, B, C, D** (approximately 3 g each)
50 cm^3 of 0.02mol/dm^3 limewater
5 cm^3 of 0.1 mol/dm^3 nitric acid
10 cm^3 of 0.5 mol/dm^3 barium chloride solution
50 cm^3 of 0.5 mol/dm^3 hydrochloric acid
10 cm^3 of 0.1 mol/dm^3 silver nitrate solution
50 cm^3 of deionised water
4 x dropping pipette
Bunsen burner
heatproof mat
4 × boiling tubes
1 × bung and delivery tube
10 × damp wooden splints
12 × test tubes
4 × spatulas
5 × 10 cm^3 measuring cylinder

Access to:
waste bowl.

Read the method before carrying out the experiment.

© WJEC CBAC Ltd 2025.

Method

Wear eye protection.

Metal Ion Test

1. Dip a damp wooden splint into compound **A**. Carry out a flame test by placing the end of the splint into a roaring Bunsen flame and record the colour seen.

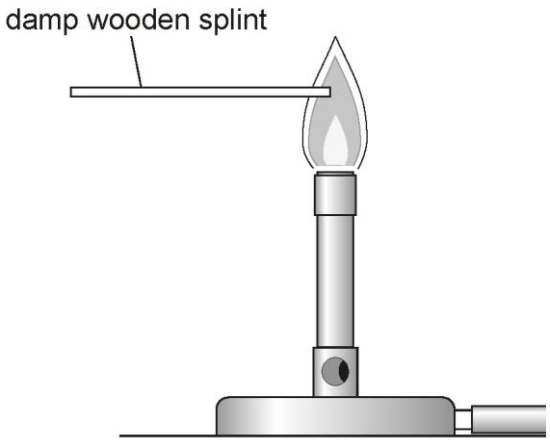

2. Repeat step 1 with compounds **B**, **C** and **D**.

Halide Ion Test

1. Add half a spatula of compound **A** to a test tube.

2. Add water to the test tube until half-full.

3. Add one pipette of nitric acid to the test tube.

4. Add two pipettes of silver nitrate solution to the test tube and record the colour of any precipitate formed.

5. Repeat steps 1 to 4 with compounds **B**, **C** and **D**.

Sulfate Test

1. Add half a spatula of compound **A** to a clean test tube.

2. Add water to the test tube until half-full.

3. Add two pipettes of barium chloride solution to the test tube and record the colour of any precipitate formed.

4. Repeat steps 1 to 3 with compounds **B**, **C** and **D**.

© WJEC CBAC Ltd 2025.

Carbonate Test

1. Set up the apparatus as shown below.

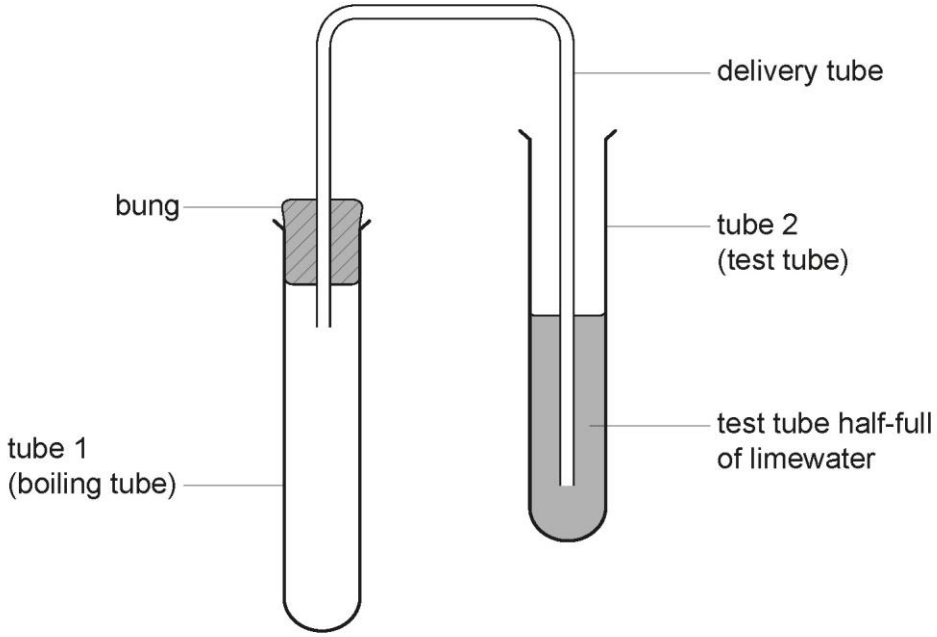

2. Place a spatula of compound **A** into tube 1.

3. Add 10 cm^3 of dilute hydrochloric acid to tube 1 and quickly replace the bung. Record your observation of what happens to the limewater in tube 2.

4. Repeat steps 1 to 3 with compounds **B**, **C** and **D**.

© WJEC CBAC Ltd 2025.

Task A

Answer **all** questions.

Examiner only

1. (a) Present your results in a table. The table should include all of the results for all tests and all compounds. [5]

(b) State the resolution of the measuring cylinder you used in this experiment. [1]

…….

6

END OF PAPER

© WJEC CBAC Ltd 2025.

Question number	Additional page, if required. Write the question number(s) in the left-hand margin.
	…… ……

© WJEC CBAC Ltd 2025.

Surname	Centre number	Candidate number
First name(s)		0

GCSE

GCSE Integrated Science (Single Award) – Unit 3a

3450U3
SCIENTIFIC ENQUIRY

INVESTIGATING COMPOUNDS USING CHEMICAL ANALYSIS

Task B
1 hour

SAMPLE ASSESSMENT MATERIALS

ADDITIONAL MATERIALS

A calculator and your Task **A** exam paper.

INSTRUCTIONS TO CANDIDATES

Use black ink or black ball-point pen. Do **not** use gel pen or correction fluid.

You may use a pencil for graphs and diagrams only.

Write your name, centre number and candidate number in the spaces provided at the top of this page.

Answer **all** questions.

Write your answers in the spaces provided in this booklet. If you run out of space, use the additional page(s) at the back of the booklet, taking care to number the question(s) correctly.

For examiner's use only		
Question	**Maximum mark**	**Mark awarded**
Task B	**22**	

INFORMATION FOR CANDIDATES

This assessment is in 2 sections, Task A and Task B. You will have completed Task A in a previous lesson.

The total number of marks available for Task B is **22**.

The number of marks is given in brackets at the end of each question or part-question.

© WJEC CBAC Ltd 2025.

Task B

Answer **all** questions

Examiner only

2. (a) Use **your results from Task A** and the information in the tables below. Identify the four compounds that you tested in **Task A.** [3]

Positive Ions		
Ion	Test	Result
Calcium	Flame	Brick-red
Copper (II)	Flame	Green
Lithium	Flame	Red
Sodium	Flame	Yellow-orange
Potassium	Flame	Lilac

Negative Ions		
Ion	Test	Result
Chloride	Silver nitrate	White precipitate
Bromide	Silver nitrate	Cream precipitate
Iodide	Silver nitrate	Yellow precipitate
Sulfate	Barium chloride	White precipitate
Carbonate	React with acid	Gas formed turns limewater milky

Compound **A** ……

Compound **B** ……

Compound **C** ……

Compound **D** ……

© WJEC CBAC Ltd 2025.

Examiner only

(b) Rob and Ali carried out the same tests on the same compounds, (compounds **A**-**D**). Their results are shown below.

Rob's Results

Compound	Flame test	Silver nitrate test	Barium chloride test	Carbonate test
A	Orange	No change	No change	Fizz and turned limewater milky
B	Orange	No change	No change	Fizz and turned limewater milky
C	Orange	Cream precipitate	No change	No change
D	Green	No change	White precipitate	No change

Ali's Results

Compound	Flame test	Silver nitrate test	Barium chloride test	Carbonate test
A	Orange	No change	No change	Fizz and turned limewater milky
B	Lilac	No change	No change	Fizz and turned limewater milky
C	Orange	White precipitate	No change	No change
D	Green	No change	White precipitate	No change

(i) Comment on the reproducibility of Rob and Ali's results. [2]

……

……

……

……

© WJEC CBAC Ltd 2025.

(ii) Give **two** reasons for any differences in their results. [2]

Examiner only

……

……

……

……

(c) Another technique used in the analysis of ions is colorimetry. Colorimetry can be used to find the concentration of nitrates in river water, by measuring how cloudy the water is.

(i) In this method, as you change the concentration of nitrate, the absorbance is affected.

Identify the independent and dependent variables in this method. [2]

independent variable: ……

dependent variable: ……

(ii) A diagram of colorimetry apparatus is shown below.

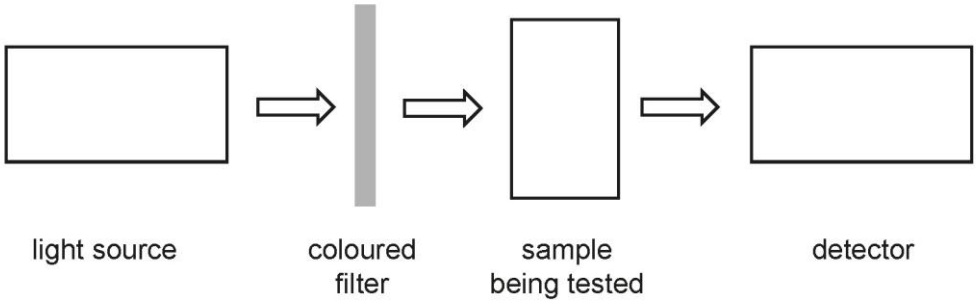

Identify a variable that would need to be controlled to obtain valid results. [1]

……..

……..

© WJEC CBAC Ltd 2025.

Examiner only

Below are the results obtained in a colorimetry experiment.

Concentration of nitrate (mg / l)	Absorbance (%)
0	0
10	0.16
20	0.32
30	0.46
40	0.60
60	0.90

(iii) State the range of the concentration of nitrate in this experiment. [1]

……..

(iv) Use the results of the colorimetry experiment.

Draw a graph of absorbance (vertical axis) against concentration of nitrate (horizontal axis) on the grid opposite. [5]

© WJEC CBAC Ltd 2025.

Examiner only

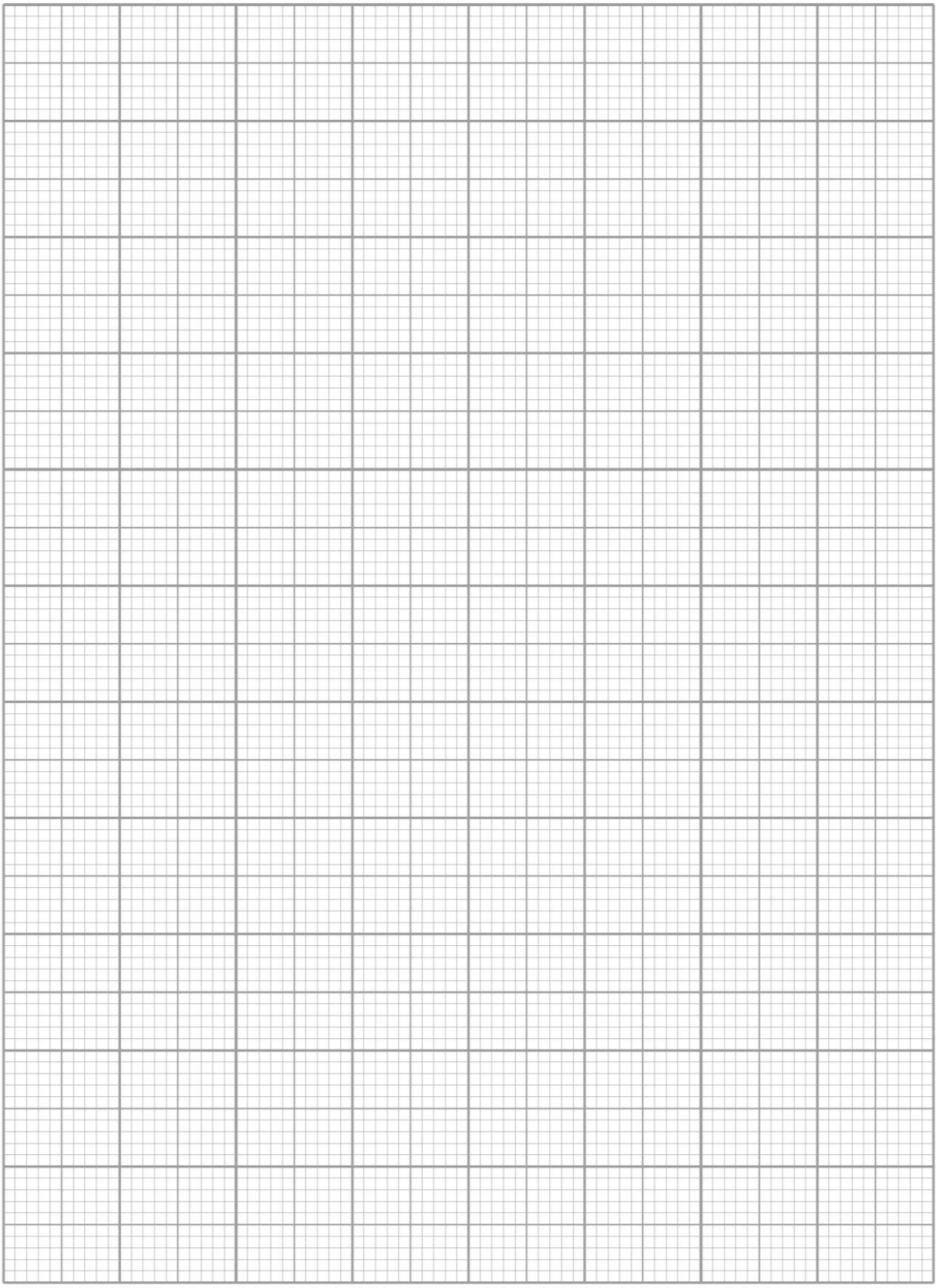

© WJEC CBAC Ltd 2025.

Examiner only

(v) Describe the relationship between the concentration of nitrate in water and the absorbance. Use your graph. [2]

……..

……..

……..

……..

(vi) The legal limit for nitrate in river water is 50 mg/l. A scientist tested a sample of water from a river. She found that the absorbance was 0.72%.

Explain the conclusion the scientist should make about the water. [2]

……..

……..

……..

……..

(vii) State whether this enquiry would be described as qualitative or quantitative. Explain your answer. [1]

……..

……..

© WJEC CBAC Ltd 2025.

(d) Another way of testing for nitrates in water is to use a testing strip (as shown below). The strip is dipped in the water to be tested.

The strip changes colour depending on how much nitrate is present. The value is determined by comparing the colour to a colour chart.

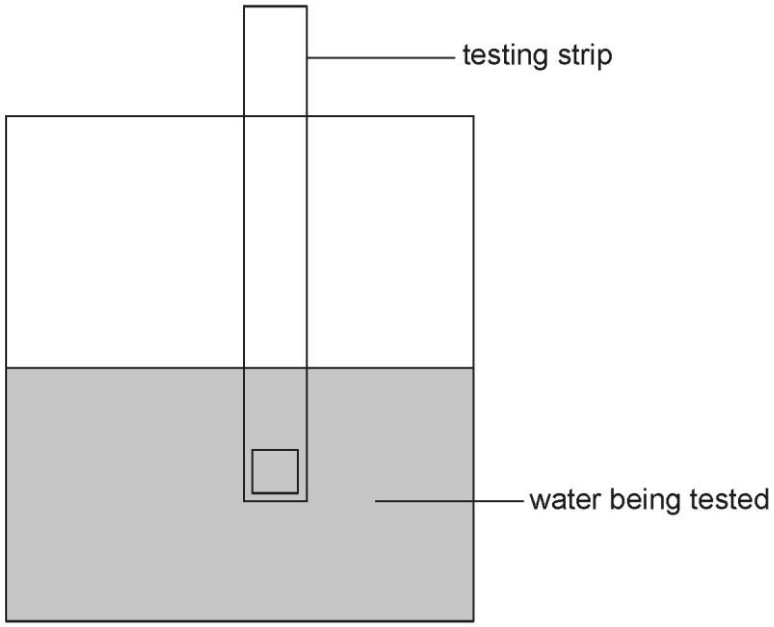

This method is not as accurate as the colorimetry experiment described in part (c).

Apart from cost, give one advantage of this method. [1]

……..……..

……..……..

……..……..

……..……..

END OF PAPER

Examine r only

22

© WJEC CBAC Ltd 2025.

Question number	Additional page, if required. Write the question number(s) in the left-hand margin.
	…… ……

© WJEC CBAC Ltd 2025.

INTEGRATED SCIENCE (SINGLE AWARD)

UNIT 3: SCIENTIFIC ENQUIRY

MARK SCHEME

Guidance for examiners

Recording of marks

Examiners must mark in red ink.

One tick must equate to one mark (apart from the questions where a level of response mark scheme is applied). Question totals should be written in the box at the end of the question.

Question totals should be entered onto the grid on the front cover and these should be added to give the script total for each candidate.

Marking rules

All work should be seen to have been marked.

Marking schemes will indicate when explicit working is deemed to be a necessary part of a correct answer. Crossed out responses not replaced should be marked.

Credit will be given for correct and relevant alternative responses which are not recorded in the mark scheme.

Marking abbreviations

The following may be used in marking schemes or in the marking of scripts to indicate reasons for the marks awarded.

cao = correct answer only

ecf = error carried forward

bod = benefit of doubt

© WJEC CBAC Ltd 2025.

Unit 3a: Investigating the Strength of Bones – Mark Scheme

Task A

Question		Marking details	Marks Available					
			AO1	AO2	AO3	Total	Maths	Scientific Enquiry
1.	(a)	Accept any hypothesis that links independent variable with dependent variable e.g. decreasing {straw / bone} length increases {the number of masses required to bend / bone strength}. Hypothesis does not need to be correct	1			1		1
	(b)	All data recorded and logically organised (1) Suitable column headings (length [of bone / straw], mass [needed to break bone]) (1) Appropriate units (cm/g) included in headings (1) Correct calculation of mean (1)	1 1	1 1		4	1	4
	(c)	+/- 1 mm	1			1		1
		Section A total	**4**	**2**	**0**	**6**	**1**	**6**

© WJEC CBAC Ltd 2025.

Task B

<table>
<tr><th colspan="3" rowspan="2">Question</th><th rowspan="2">Marking details</th><th colspan="6">Marks Available</th></tr>
<tr><th>AO1</th><th>AO2</th><th>AO3</th><th>Total</th><th>Maths</th><th>Scientific Enquiry</th></tr>
<tr><td>2</td><td>(a)</td><td>(i)</td><td>[Bone / straw] length</td><td></td><td>1</td><td></td><td>1</td><td></td><td>1</td></tr>
<tr><td></td><td></td><td>(ii)</td><td>
<table>
<tr><th>Controlled variable</th><th>How it was controlled</th></tr>
<tr><td>Midpoint of each bone / straw used</td><td>Measured with a ruler</td></tr>
<tr><td><u>Material of / type of</u> straws</td><td>All made from the same paper / material</td></tr>
<tr><td>Length resting on clamp</td><td>Same length resting each time</td></tr>
</table>
Any <u>two</u> controlled variables (2)
with corresponding description (2)
</td><td></td><td>4</td><td></td><td>4</td><td></td><td>4</td></tr>
<tr><td></td><td>(b)</td><td colspan="2">Axes with correct orientation and labelled correctly with units (1) ecf headings and units from table
Appropriate scales chosen that use at least ½ of graph paper (1)
All plots correctly plotted with <1 small square tolerance (2)
1 error (1) >1 error (0)
Appropriate line of best fit (1)
Do not accept a thick, double, wispy line</td><td>1</td><td>3

1</td><td></td><td>5</td><td>5</td><td>5</td></tr>
</table>

© WJEC CBAC Ltd 2025.

	(c)		As [straw] length increases, mass [required to bend the straw] decreases / or reverse argument **OR** Correct statement that matches candidate's own data		1		1		1
	(d)		Repeatability Carry out [the experiment] more times / repeat the experiment / do the experiment again and compare repeats (1) Reproducibility Compare results with other groups (1)	2			2		2
	(e)	(i)	20 cm Trial 3 circled (1) Anomalous result does not follow the pattern /are not within the range of the other results (1)			2	2		2
		(ii)	cm for bone length is in the table body (1) should be in column heading (1) Order of bone length not logical (1) should be ascending or descending (1)		2	2	4		2
	(f)		Range of at least 4 diameters(1) Two control variables stated e.g. length of straw/ bone/ type of material (1) For the third mark: **Either:** measured mass required to break the straw / bone **or** Logical sequence planned i.e. brief description of method e.g. keep all bone lengths the same, but change the diameter / thickness of bone, hang masses off midpoint etc.			3	3		3
			Section B total	**3**	**12**	**7**	**22**	**6**	**22**

© WJEC CBAC Ltd 2025.

Unit 3b: Investigating Compounds using Chemical Analysis – Mark Scheme

Task A

<table>
<tr><th colspan="2" rowspan="2">Question</th><th rowspan="2">Marking details</th><th colspan="6">Marks Available</th></tr>
<tr><th>AO1</th><th>AO2</th><th>AO3</th><th>Total</th><th>Maths</th><th>Enquiry</th></tr>
<tr><td>1.</td><td>(a)</td><td>Headings (1)
Table logically organised (1)
All tests recorded, however arranged (2) award 1 mark if 2 or 3 recorded
Observations include detail of precipitate / solid seen at least once OR colour change and fizzing OWTTE seen once

Below are expected results, DO NOT penalise unexpected.

<table>
<tr><td rowspan="2">Compound</td><td colspan="4">Observations</td></tr>
<tr><td>Flame / Metal ion test</td><td>Silver nitrate / Halide test</td><td>Sulfate test</td><td>Carbonate test</td></tr>
<tr><td>A</td><td>Yellow / Orange</td><td>No change</td><td>No change</td><td>Fizz and limewater turned milky</td></tr>
<tr><td>B</td><td>Lilac / Pink</td><td>No change</td><td>No change</td><td>Fizz and limewater turned milky</td></tr>
<tr><td>C</td><td>Yellow / Orange</td><td>White precipitate / solid</td><td>No change</td><td>No change</td></tr>
<tr><td>D</td><td>Green</td><td>No change</td><td>White precipitate / solid</td><td>No change</td></tr>
</table>
</td><td>1

2</td><td>1

1</td><td></td><td>5</td><td></td><td>5</td></tr>
</table>

© WJEC CBAC Ltd 2025.

	(b)	[±] 0.1 [cm^3]	1			1		1
		Task A total	**4**	**2**	**0**	**6**		**6**

© WJEC CBAC Ltd 2025.

Task B

Question			Marking details	Marks Available					
				AO1	AO2	AO3	Total	Maths	Enquiry
2	(a)		Compound A is sodium carbonate Compound B is potassium carbonate Compound C is sodium chloride Compound D is copper sulfate All 8 ions correct = 3 marks 6 or 7 ions correct = 2 marks Any 3, 4 or 5 individual ions identified correctly = 1 mark		3		3		3
	(b)	(i)	Barium chloride test **and** carbonate test are reproducible (1) Flame test **and** silver nitrate test are not reproducible (1) OR A **and** D are reproducible (1) B **and** C are not (1)			2	2		2
		(ii)	**Flame test** Contamination / mixing / sodium masking the potassium / colour perception / colour of burning splint (1) **Silver nitrate test** Difficult to tell the difference between colours (1)			2	2		2
	(c)	(i)	Independent = concentration (1) Dependent = absorbance (1)		2		2		2
		(ii)	Temperature / light intensity (accept light source) / volume of sample / container / filter colour / filter thickness (1)		1		1		1
		(iii)	0-60/ 60 (mg/l)		1		1		1

© WJEC CBAC Ltd 2025.

		(iv)	Axis labelled with correct orientation and units (1) Appropriate scales chosen that use at least ½ of graph paper (1) All plots correctly plotted with <1 small square tolerance (2) 1 error (1) >1 error (0) Correct line (1) Do not accept thick, double, wispy lines	1 1	2 1		5	5	5
		(v)	As the concentration increases, the absorbance increases (1) at a constant rate (1)		2		2	2	2
		(vi)	Correct use of figures from table or graph (e.g. 0.72 = 48 mg/l) (allow ecf from graph) (1) So the water is below the legal limit for nitrates (1)			2	2	2	2
		(vii)	Quantitative **and** There are measurements of how much of the substance is in the sample/ there are numerical results (1)	1			1		1
	(d)		Advantage = Quicker / easier / don't need equipment / can be done anywhere (1)			1	1		1
			Task B total	**3**	**12**	**7**	**22**	**6**	**22**

© WJEC CBAC Ltd 2025.